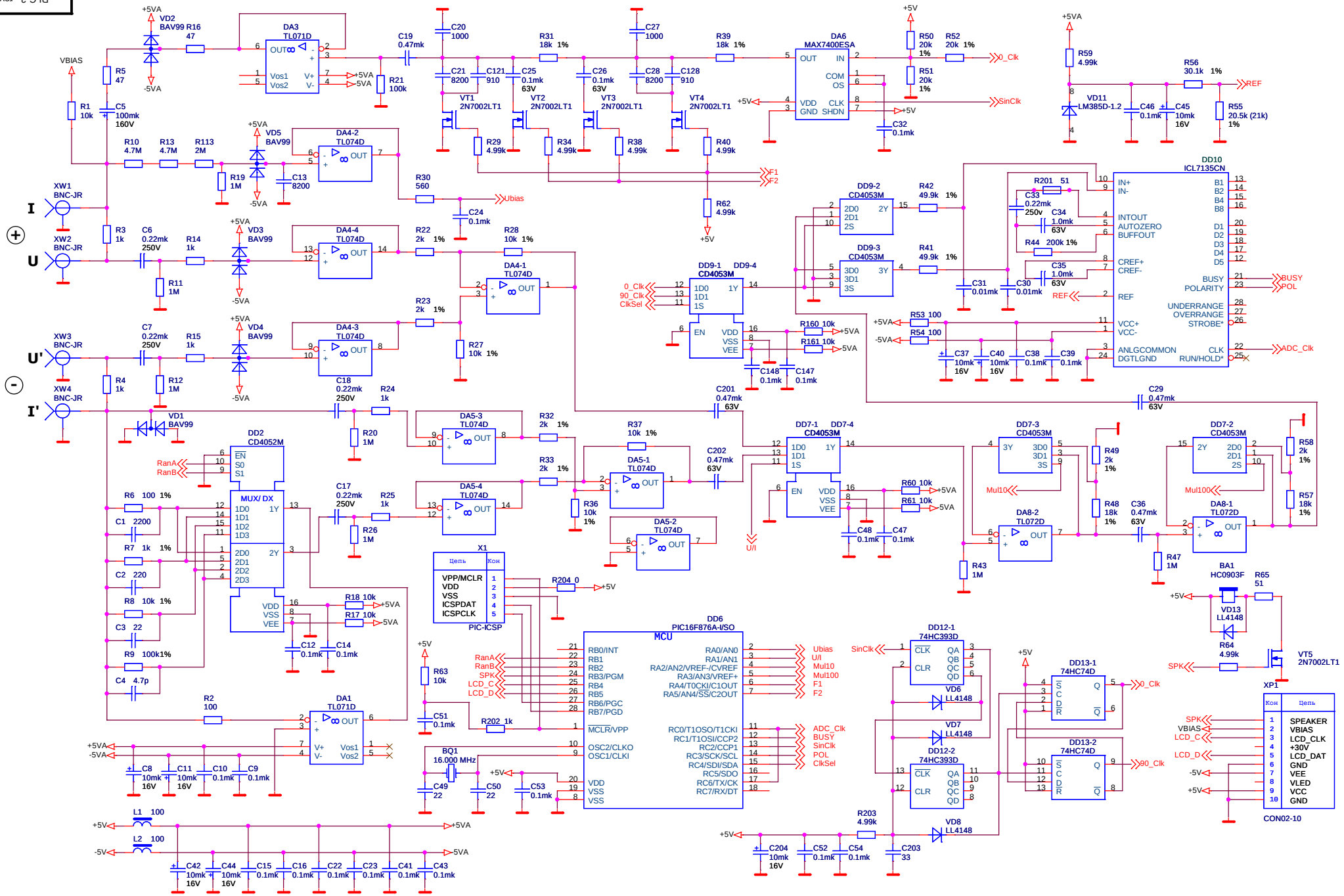
RLC-2 rev. 1.2
DA3 TL071D
DA4-2 TL074D
DA4-4 TL074D
DA4-3 TL074D
DA4-1 TL074D
DA5-3 TL074D
DA5-1 TL074D
DA5-4 TL074D
DA5-2 TL074D
DA1 TL071D
DA6 MAX7400ESA
DD9-1 CD4053M
DD9-2 CD4053M
DD9-3 CD4053M
DD9-4
DD10 ICL7135CN
DD7-1 CD4053M
DD7-3 CD4053M
DD7-2 CD4053M
DD2 CD4052M
MUX/ DX
DD6 PIC16F876A-I/SO
MCU
DD12-1 74HC393D
DD12-2 74HC393D
DD13-1 74HC74D
DD13-2 74HC74D
DA8-1 TL072D
DA8-2 TL072D
VD11 LM385D-1.2
BA1 HC0903F
VT5 2N7002LT1
VT1 2N7002LT1
VT2 2N7002LT1
VT3 2N7002LT1
VT4 2N7002LT1
XW1 BNC-JR
XW2 BNC-JR
XW3 BNC-JR
XW4 BNC-JR
X1
PIC-ICSP
XP1
CON02-10
BQ1 16.000 MHz
VPP/MCLR
VDD
VSS
ICSPDAT
ICSPCLK
SPEAKER
VBIAS
LCD_CLK
+30V
LCD_DAT
GND
VEE
VLED
VCC
GND
RLC-2 rev. 1.2
RLC-2 MAIN BOARD
схема электрическая
принципиальная
RLC-2 rev. 1.2 (08.2009)

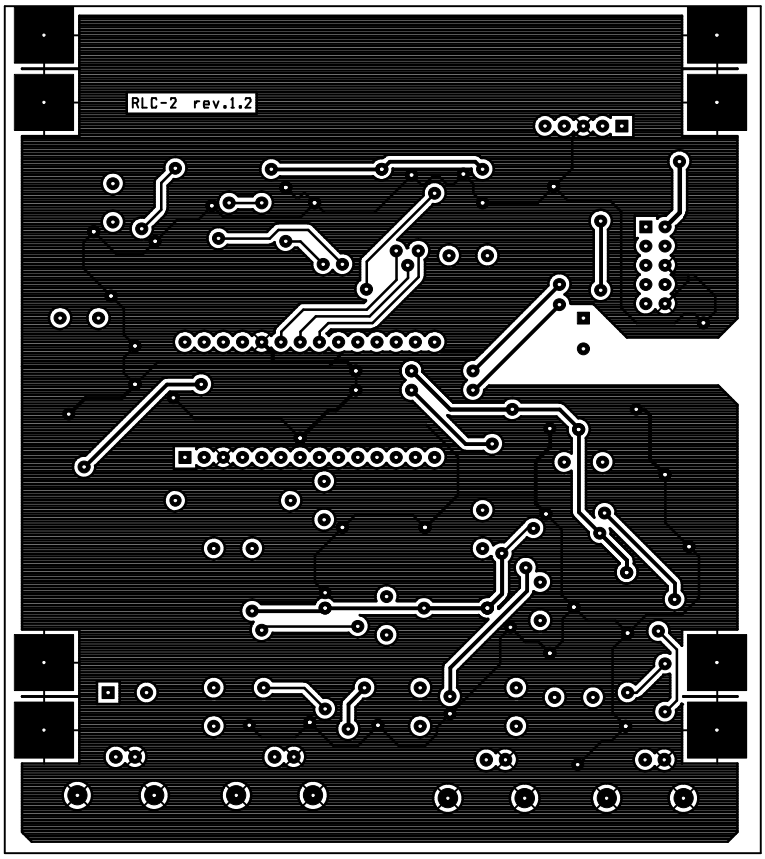
RLC-2 rev.1.2

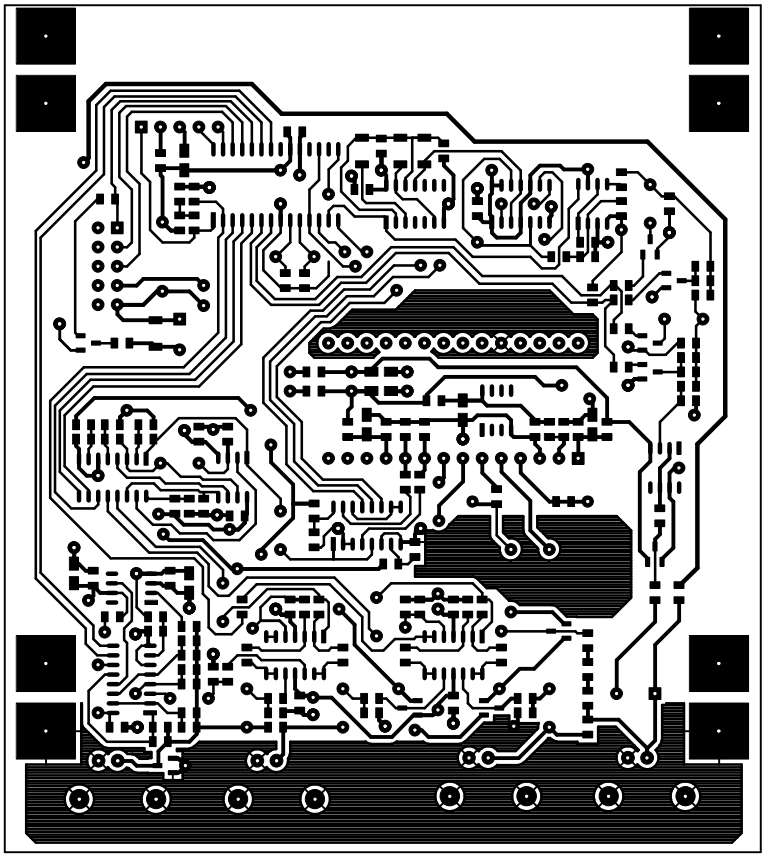

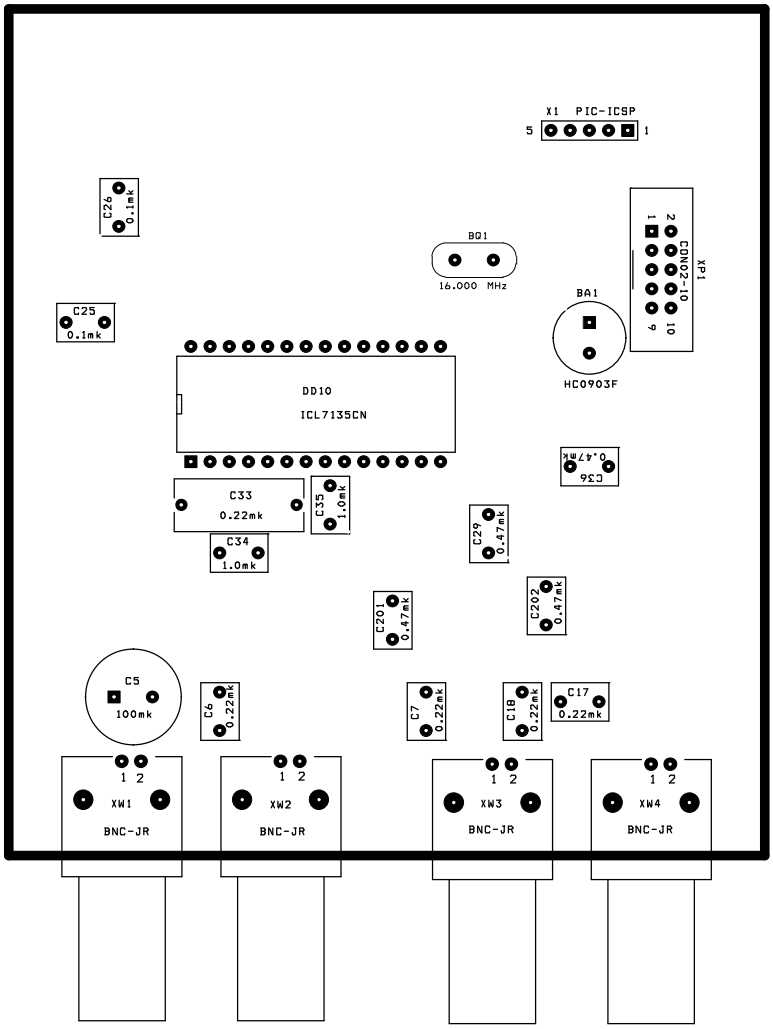
X1 PIC-ICSP
5
1
C26
0.1mk
BQ1
16.000 MHz
XP1
CDM02-10
1
2
9
10
BA1
HC0903F
C25
0.1mk
DD10
ICL7135CN
C36
0.47mk
C33
0.22mk
C35
1.0mk
C34
1.0mk
C29
0.47mk
C201
0.47mk
C202
0.47mk
C5
100mk
C6
0.22mk
C7
0.22mk
C18
0.22mk
C17
0.22mk
1 2
XW1
BNC-JR
1 2
XW2
BNC-JR
1 2
XW3
BNC-JR
1 2
XW4
BNC-JR

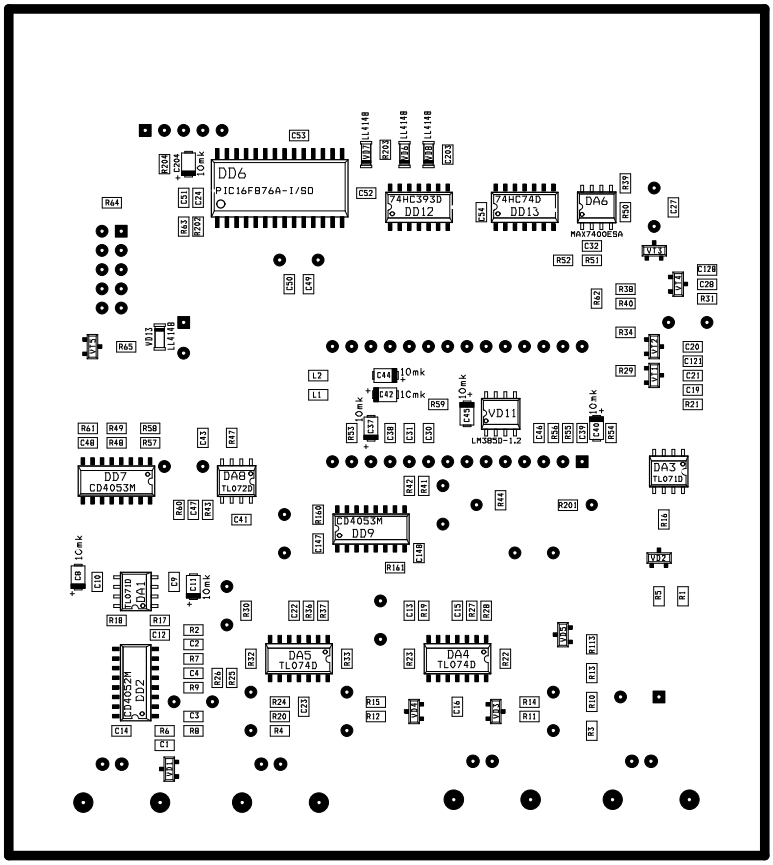
DD6
PIC16F876A-I/SO
74HC393D
DD12
74HC74D
DD13
DA6
MAX7400ESA
VD11
LM385D-1.2
DD7
CD4053M
DA8
TL072D
CD4053M
DD9
DA3
TL071D
TL071D
DA1
CD4052M
DD2
DA5
TL074D
DA4
TL074D
LL4148
10mk
1Cmk